# SOLATUBE 750 DS-C
# (21 IN / 530 MM)
# 8 INCH SELF FLASHING
# SUSPENDED CEILING W/THERMAL INSULATION PANEL

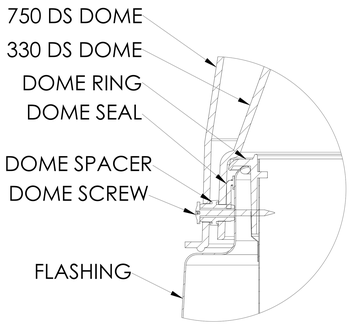


**DETAIL A**
**SCALE 3 : 1**

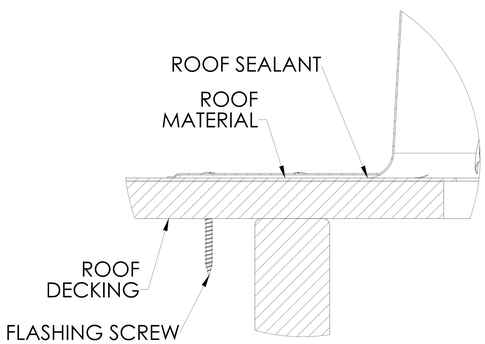


**DETAIL B**
**SCALE 3 : 1**

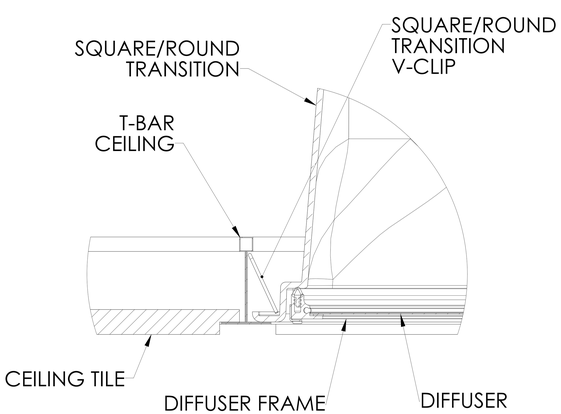


**DETAIL C**
**SCALE 3 : 1**

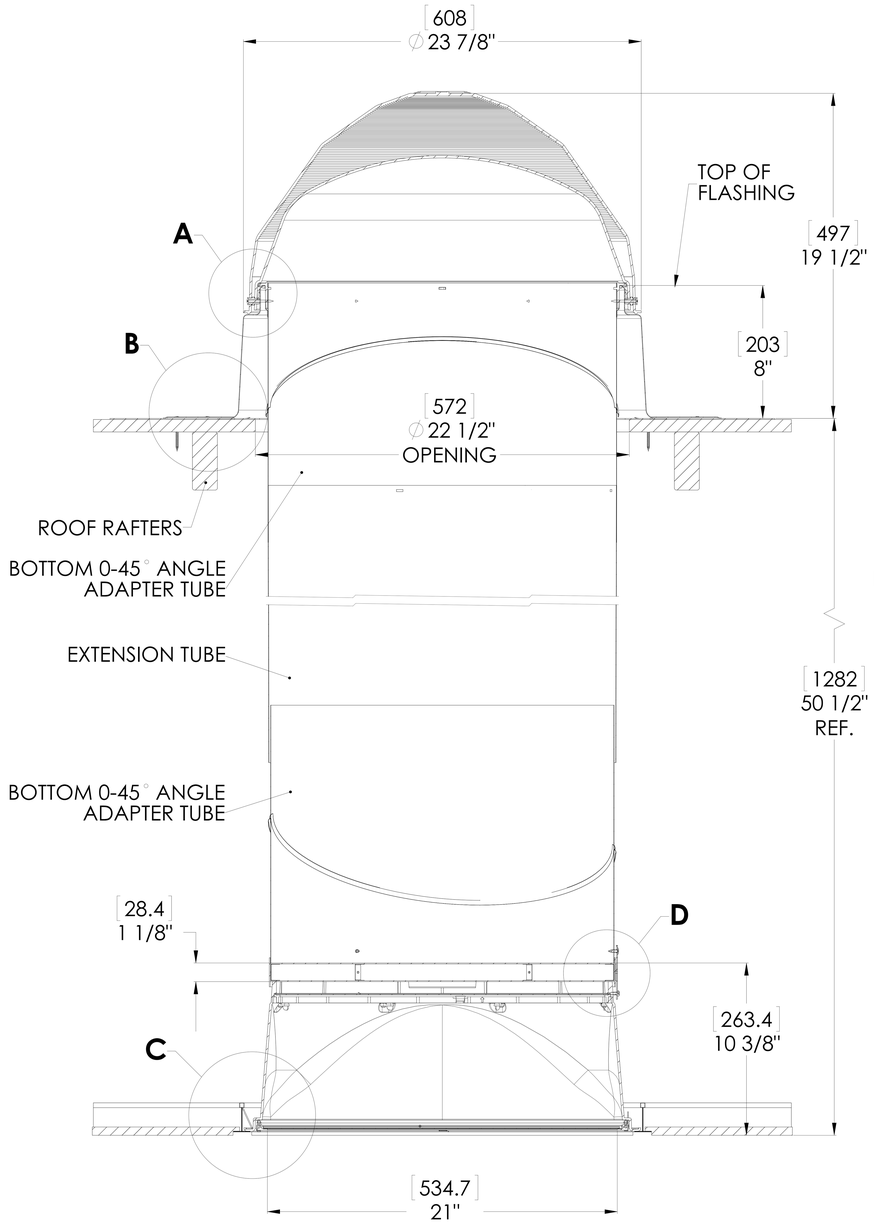


**FULL SECTION**
**SCALE 1:1**

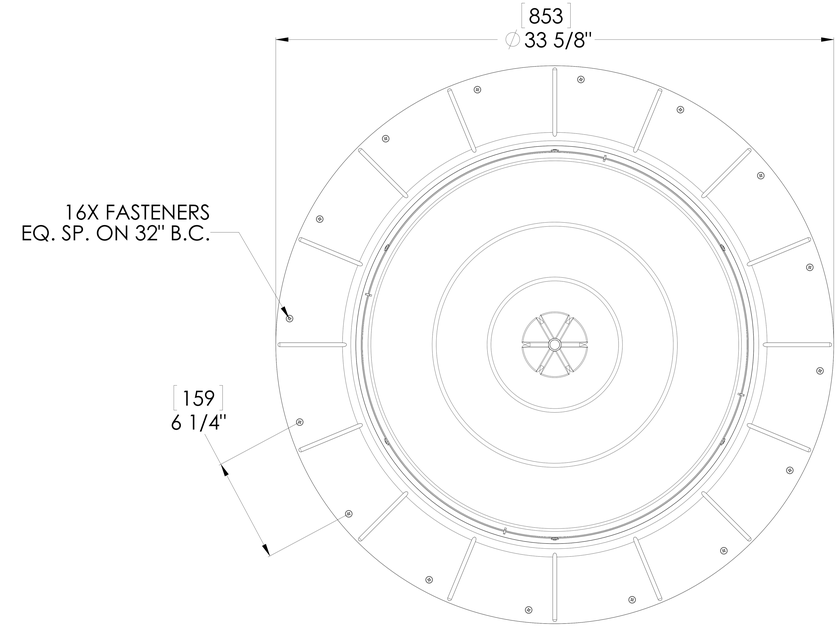


**TOP VIEW**
**SCALE 1:1**

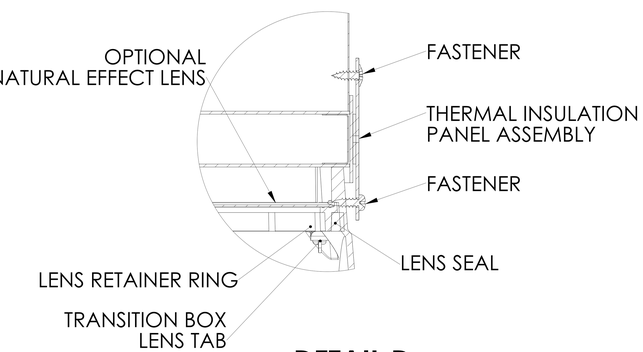


**DETAIL D**
**SCALE 3 : 1**

NOTES:

1. STRUCTURAL ELEMENTS (PLYWOOD, RAFTERS, DRYWALL ETC.) BY OTHERS & SHOWN FOR REFERENCE ONLY.
2. ALL TUBE JOINTS & SEAMS TAPED WITH 2" FOIL TAPE (NOT SHOWN).
3. DIMENSIONS IN BRACKETS ARE METRIC UNLESS OTHERWISE SPECIFIED.
4. 6" MIN CLEARANCE SHOULD BE MAINTAINED FROM ALL SOLATUBE COMPONENTS AND OTHER PLENUM COMPONENTS.

| | | |
|---|---|---|
| UNLESS OTHERWISE SPECIFIED: DIMENSIONS ARE IN INCHES TOLERANCES: ANGULAR: ±0.5° .X ± .1 .XX ± .02 .XXX ± .005 | SOLATUBE INTERNATIONAL, INC. COPYRIGHT 2015 WWW.SOLATUBE.COM | SOLATUBE 2210 OAK RIDGE WAY VISTA, CALIFORNIA 92081-8341 PH (760) 597-4400 |
| MATERIAL -- -- | DRAWN BY STEVENS / DATE 8/30/15 | TITLE: 750 DS (21") SELF FLASHING SUSPENDED CEILING |
| FINISH -- | CHECKED BY -- / DATE -- | SIZE / DWG. NO. WEB-750-SF-TIP-SC / REV 1 |
| DO NOT SCALE DRAWING | APPROVED BY -- / DATE -- | SCALE: 1:1 / SHEET 1 OF 1 |