SOLATUBE 330 DS-C
(21 IN / 530 MM)
8 INCH SELF FLASHING W/ MEMBRANE COUNTER FLASHING
SUSPENDED CEILING - ANGLE ADAPTER

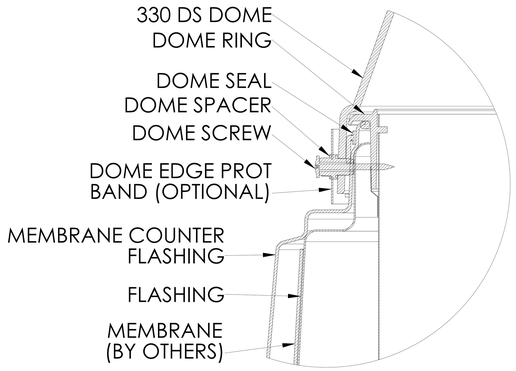

DETAIL A
SCALE 3 : 1

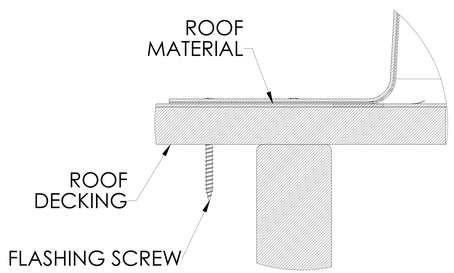

DETAIL B
SCALE 3 : 1

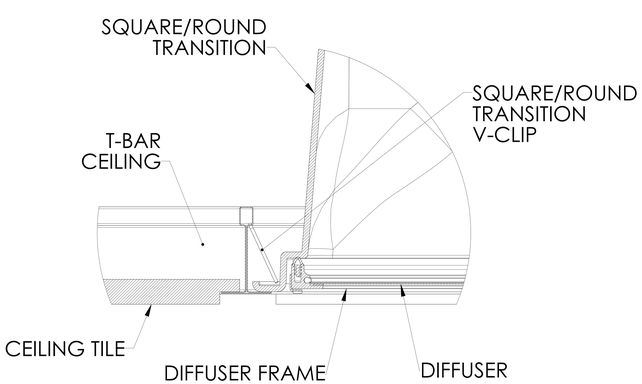

DETAIL C
SCALE 3 : 1

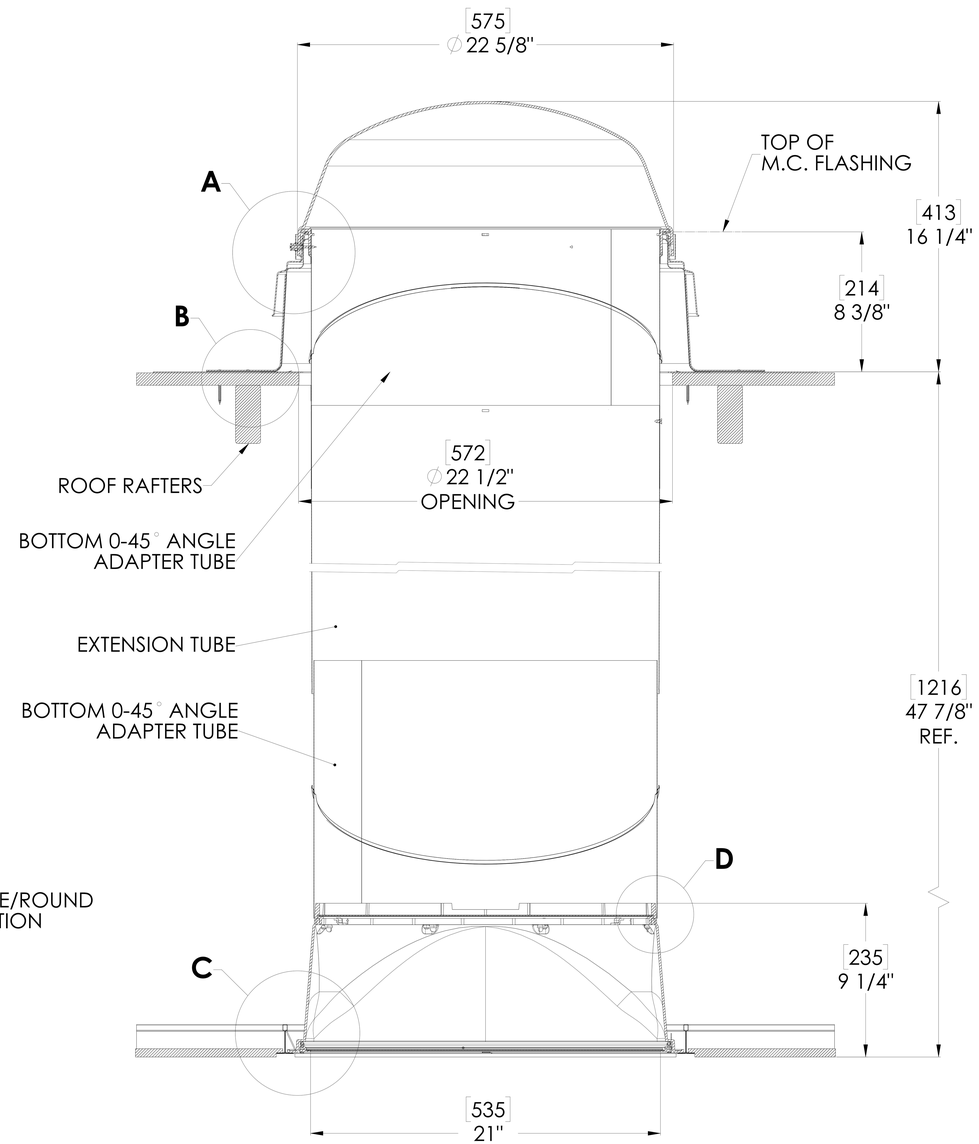

FULL SECTION
SCALE 1:1

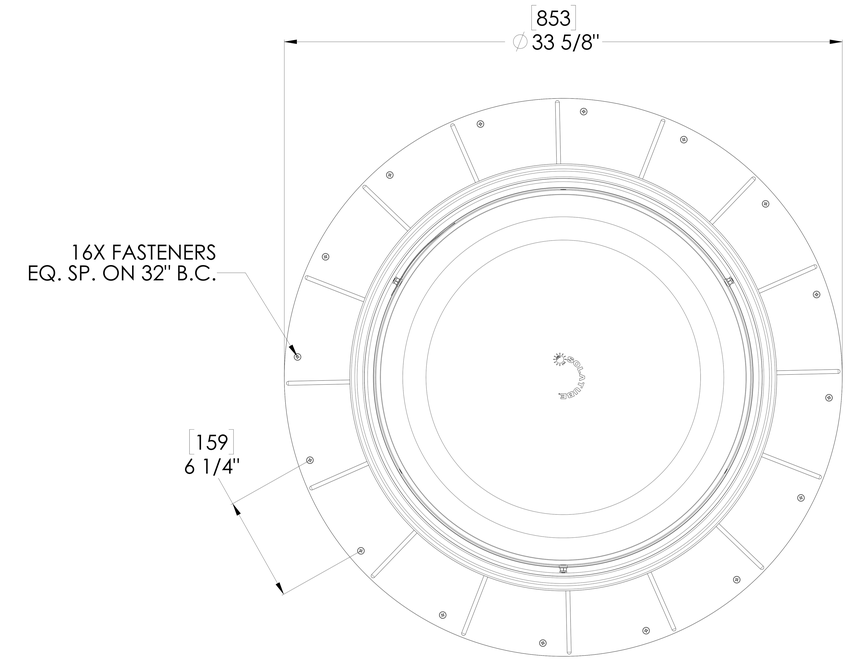

TOP VIEW
SCALE 1:1

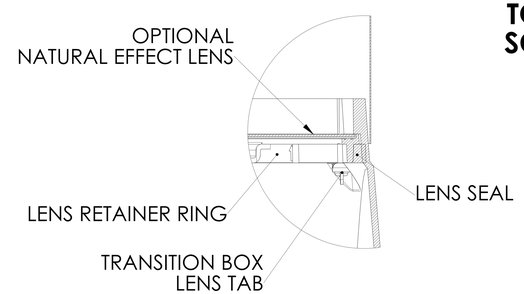

DETAIL D
SCALE 3 : 1

NOTES:

1. STRUCTURAL ELEMENTS (PLYWOOD, RAFTERS, DRYWALL ETC.) BY OTHERS & SHOWN FOR REFERENCE ONLY.
2. ALL TUBE JOINTS & SEAMS TAPED WITH 2" FOIL TAPE (NOT SHOWN).
3. DIMENSIONS IN BRACKETS ARE METRIC UNLESS OTHERWISE SPECIFIED.
4. 6" MIN CLEARANCE SHOULD BE MAINTAINED FROM ALL SOLATUBE COMPONENTS AND OTHER PLENUM COMPONENTS.

UNLESS OTHERWISE SPECIFIED: DIMENSIONS ARE IN INCHES TOLERANCES: ANGULAR: ±0.5° .X ± .1 .XX ± .02 .XXX ± .005	SOLATUBE INTERNATIONAL, INC. COPYRIGHT 2016 WWW.SOLATUBE.COM	SOLATUBE 2210 OAK RIDGE WAY VISTA, CALIFORNIA 92081-8341 PH (760) 597-4400
MATERIAL -- --	DRAWN BY STEVENS / DATE 8/30/15	TITLE: 330 DS (21") SELF FLASHING 8" MCF, AA, SUSPENDED CEILING
FINISH --	CHECKED BY -- / DATE --	DWG. NO. WEB S330DS-C-DA-F8-MCF-AK-E1 / REV 1
DO NOT SCALE DRAWING	APPROVED BY -- / DATE --	SCALE: 1:1 / SHEET 1 OF 1