SOLATUBE 300 DS (14 IN / 355 MM) CURB CAP SUSPENDED CEILING

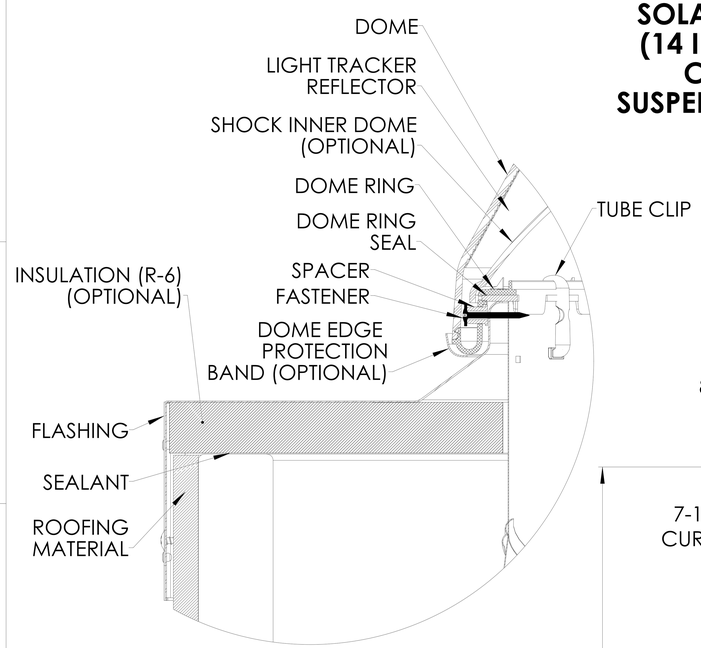

DETAIL B
SCALE 3 : 1

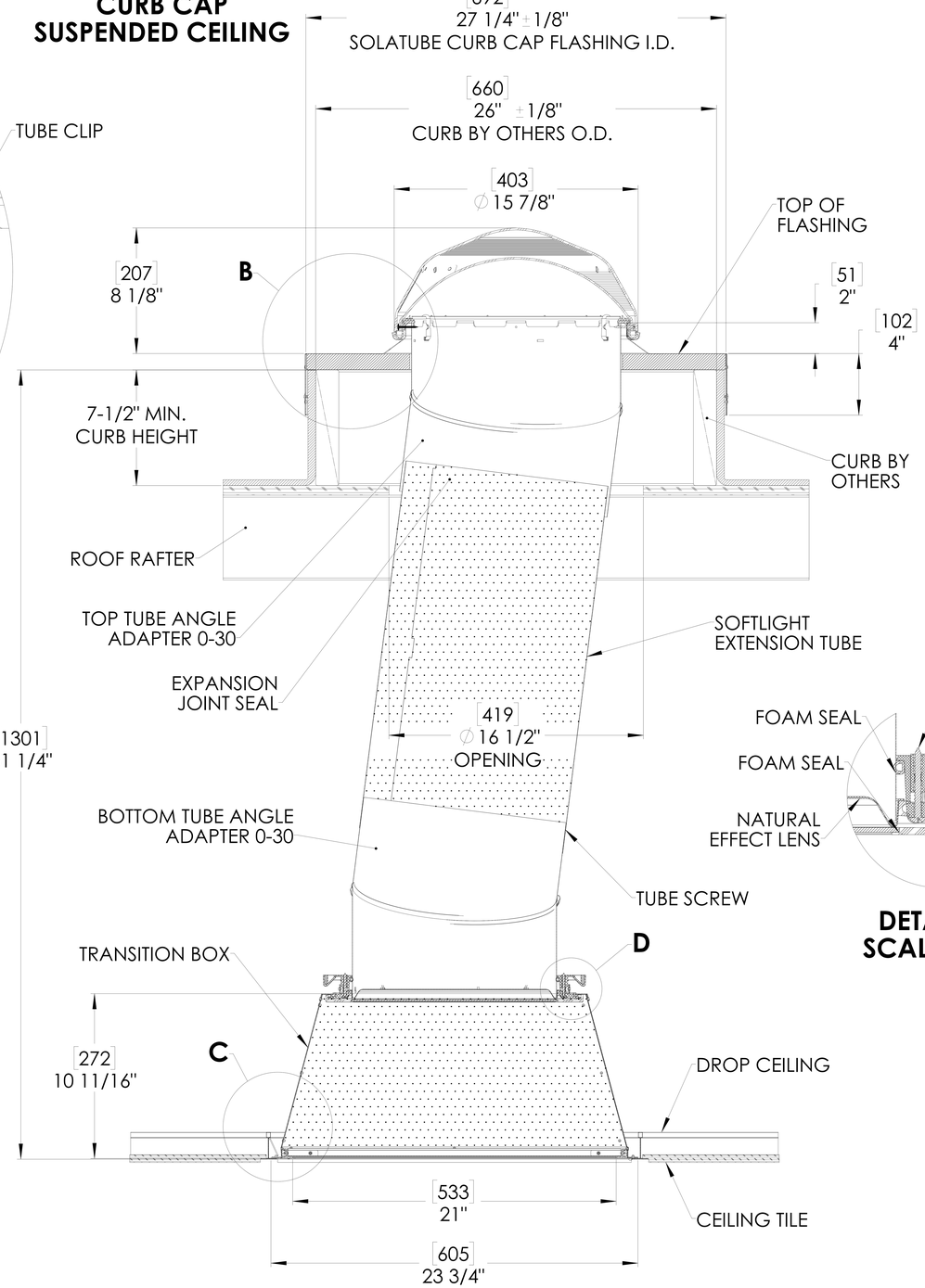

FULL SECTION
SCALE 1:1

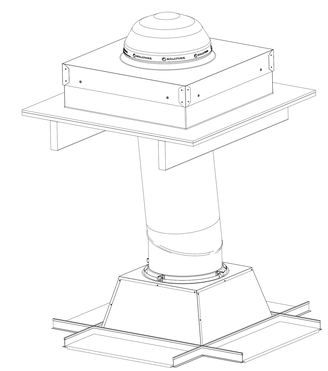

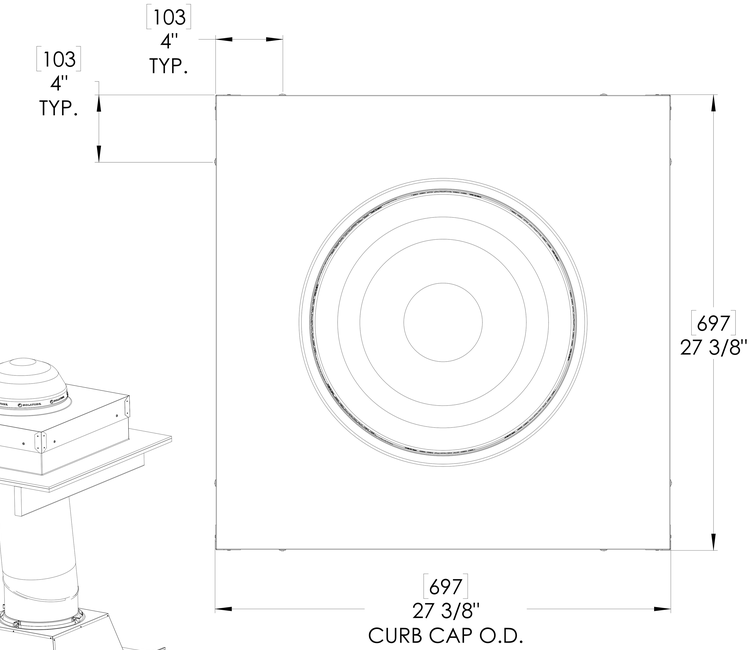

TOP VIEW

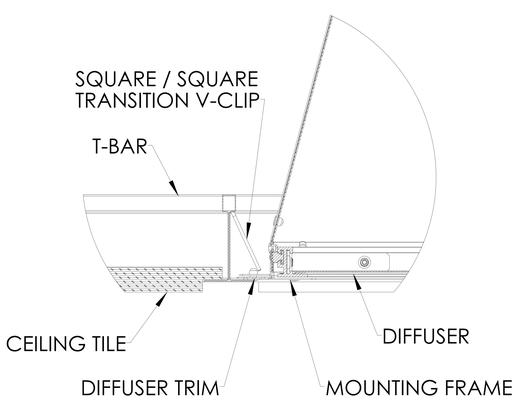

DETAIL C
SCALE 3 : 1

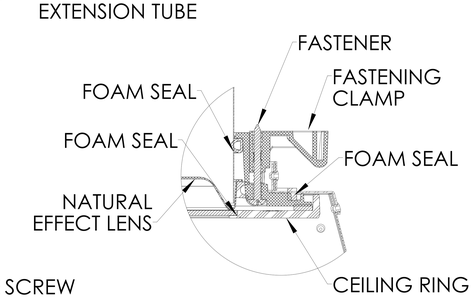

DETAIL D
SCALE 3 : 1

NOTES:

1. STRUCTURAL ELEMENTS (PLYWOOD, RAFTERS, DRYWALL ETC. BY OTHERS & SHOWN FOR REFERENCE ONLY.
2. ALL TUBE JOINTS & SEAMS TAPED WITH 2" FOIL TAPE (NOT SHOWN).
3. DIMENSIONS IN BRACKETS ARE METRIC UNLESS OTHERWISE SPECIFIED.
4. 6" MIN CLEARANCE SHOULD BE MAINTAINED FROM ALL SOLATUBE COMPONENTS AND OTHER PLENUM COMPONENTS.

5 . 30" MIN HEIGHT NEEDED FOR TRANSITION BOX

6. ONE (1) SOFTLIGHT EXTENSION TUBE PER DAYLIGHTING SYSTEM. MUST INSTALL AS FINAL EXTENSION TUBE PRIOR TO THE BOTTOM (ANGLE) TUBE.
7. CURB BUILT BY OTHERS, ALLOW FOR THICKNESS OF ROOFING MATERIALWHEN BUILDING/SOURCING CURB.

UNLESS OTHERWISE SPECIFIED: DIMENSION TOLERANCE FRACTIONS ± 1/4" INCH .X ± .1 .XX ± .06 MILLIMETER [.X] ± 2.5 [.XX] ± 1.5	SOLATUBE INTERNATIONAL, INC. COPYRIGHT 2017 WWW.SOLATUBE.COM	SOLATUBE® 2210 OAK RIDGE WAY VISTA, CALIFORNIA 92081-8341 PH (760) 597-4400	
MATERIAL -- --	DRAWN BY STEVENS	DATE 3/17/17	TITLE: 300 DS CURB CAP SUSPENDED CEILING
FINISH --	CHECKED BY --	DATE --	SIZE D
	APPROVED BY -- --	DATE --	DWG. NO. SM300DS-C-DA-FC-LN-TM
DO NOT SCALE DRAWING			REV 2
			SCALE: 1:1 SHEET 1 OF 1