SOLATUBE 750 DS-C
(21 IN / 530 MM)
8" SELF FLASHING
SUSPENDED CEILING WITH
SOFTLIGHT EXTENSION TUBE AND
TRANSITION BOX

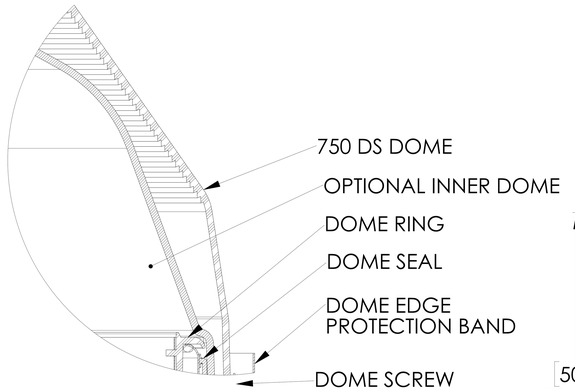

DETAIL A
SCALE 3 : 1

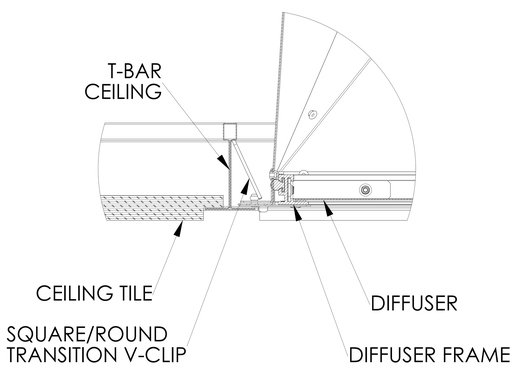

DETAIL B
SCALE 3 : 1

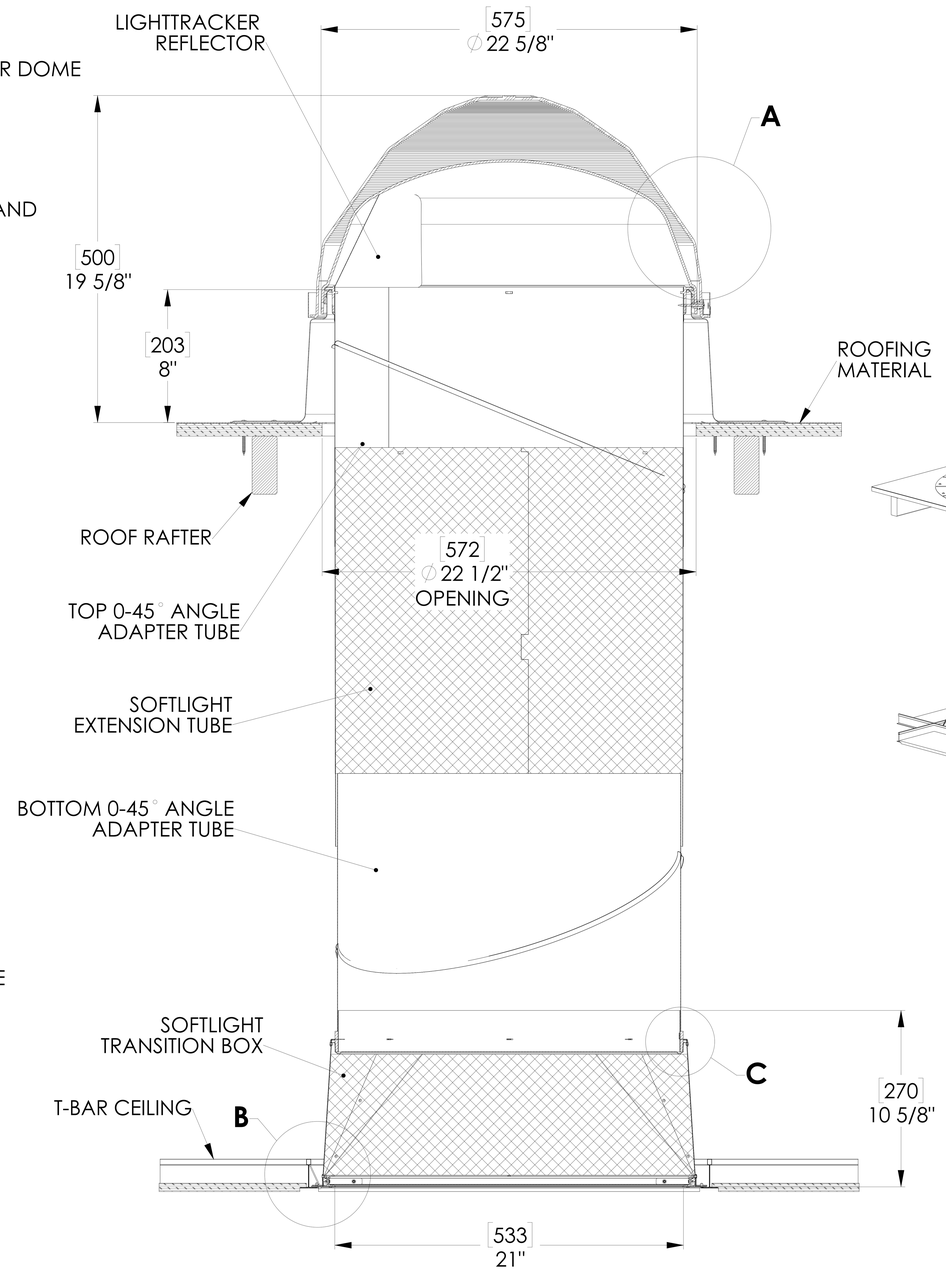

FULL SECTION
SCALE 1:1

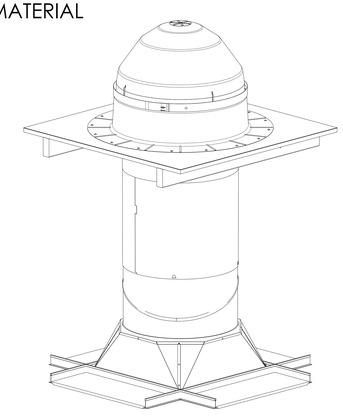

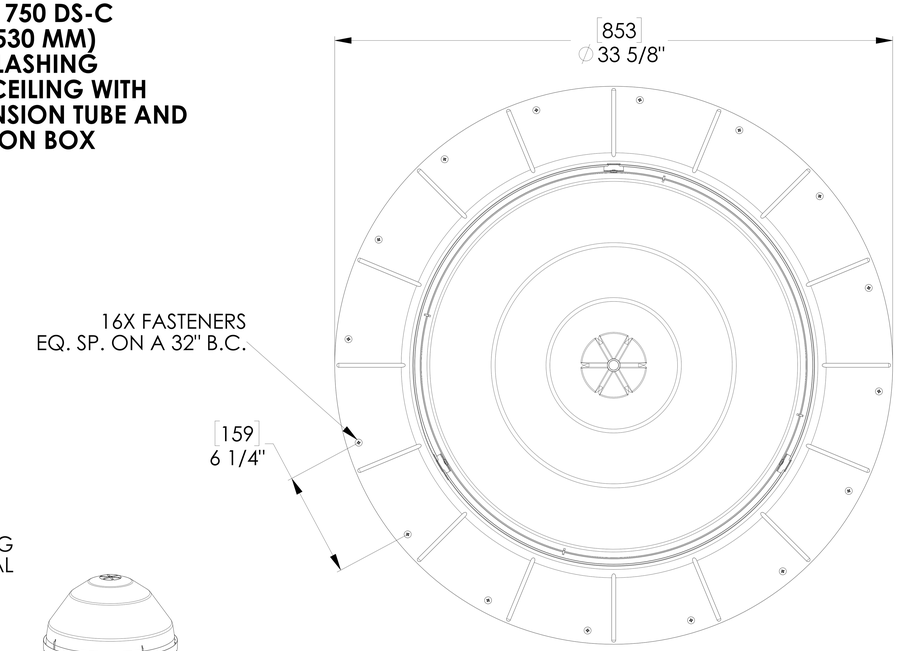

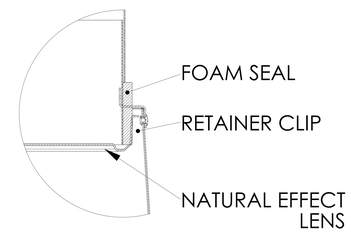

DETAIL C
SCALE 3 : 1

NOTES:

1. STRUCTURAL ELEMENTS (PLYWOOD, RAFTERS, DRYWALL ETC.) BY OTHERS & SHOWN FOR REFERENCE ONLY.
2. ALL TUBE JOINTS & SEAMS TAPED WITH 2" FOIL TAPE (NOT SHOWN).
3. DIMENSIONS IN BRACKETS ARE METRIC UNLESS OTHERWISE SPECIFIED.
4. 6" MIN CLEARANCE SHOULD BE MAINTAINED FROM ALL SOLATUBE COMPONENTS AND OTHER PLENUM COMPONENTS.
5. 30" MIN. HEIGHT NEEDED FOR TRANSITION BOX.
6. ONE (1) SOLATUBE EXTENSION TUBE PER DAYLIGHTING SYSTEM. MUST INSTAL AS FINAL EXTENSION TUBE PRIOR TO THE BOTTOM (ANGLE) TUBE.

UNLESS OTHERWISE SPECIFIED: DIMENSION TOLERANCE FRACTIONS ± 1/4" INCH: .X ± .1, .XX ± .06 MILLIMETER: [.X] ± 2.5, [.XX] ± 1.5	SOLATUBE INTERNATIONAL, INC. COPYRIGHT 2017 WWW.SOLATUBE.COM	SOLATUBE® 2210 OAK RIDGE WAY VISTA, CALIFORNIA 92081-8341 PH (760) 597-4400
MATERIAL -- --	DRAWN BY: STEVENS DATE: 12/1/17	TITLE: 750 DS-C SELF FLASHING SUSPENDED CEILING
FINISH --	CHECKED BY: -- DATE: --	SIZE: D DWG. NO.: S750DS-C-DAI-AK-F8-TM REV: 1
DO NOT SCALE DRAWING	APPROVED BY: -- DATE: --	SCALE: 1:1 SHEET 1 OF 1