SOLATUBE 290 DS
(14 IN / 350 MM)
CURB FLASHIN-PITCHED ROOF
HARD CEILING

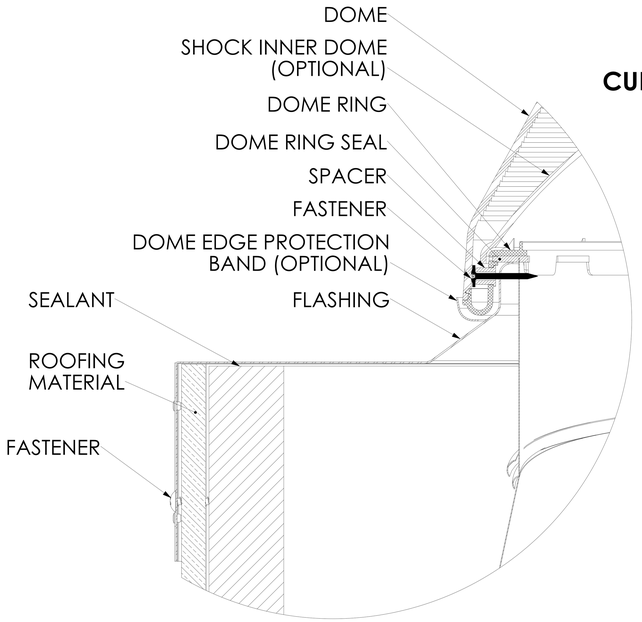

DETAIL B
SCALE 3 : 1

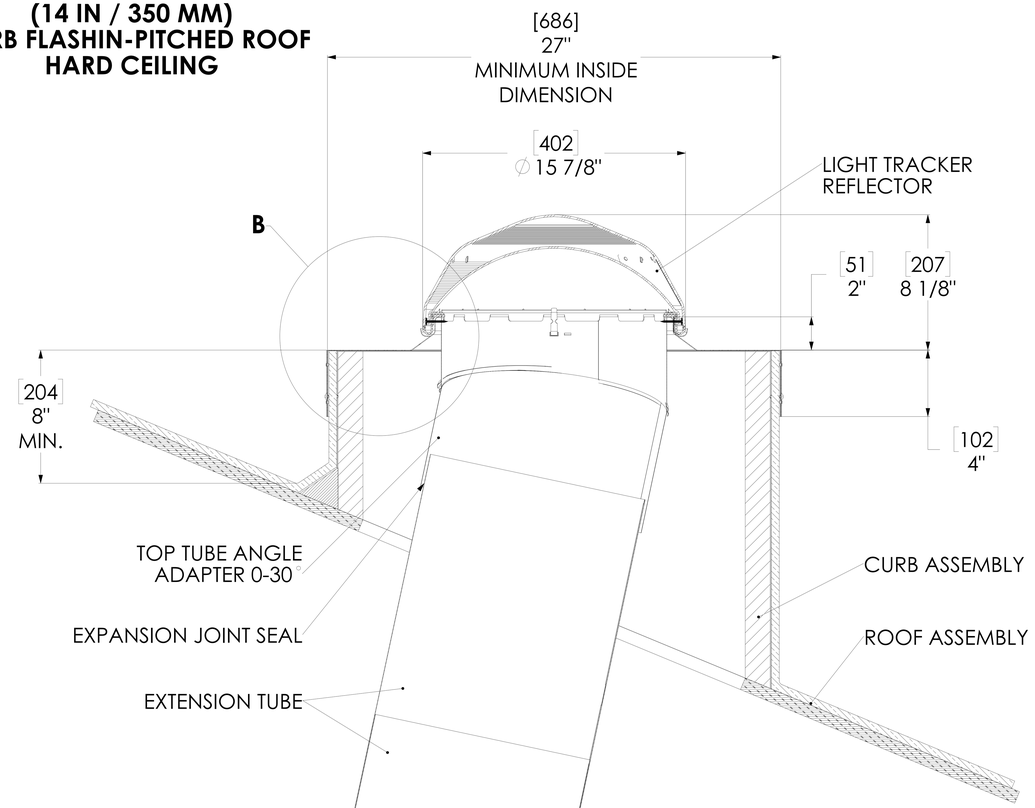

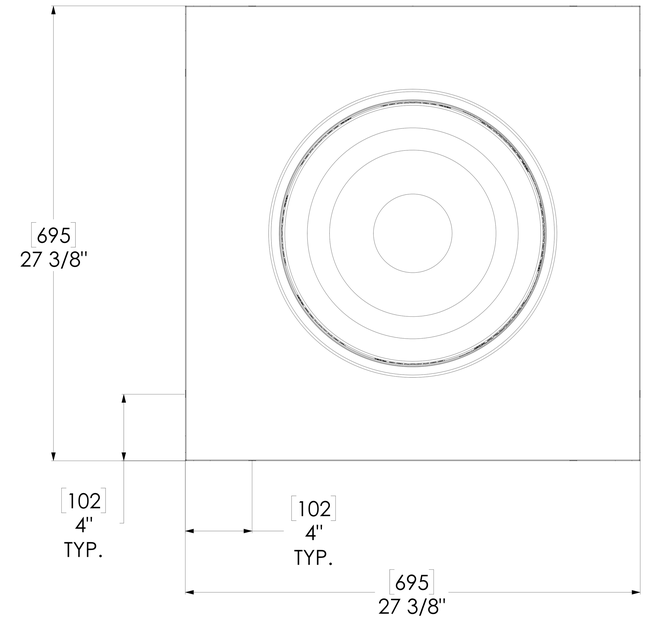

TOP VIEW

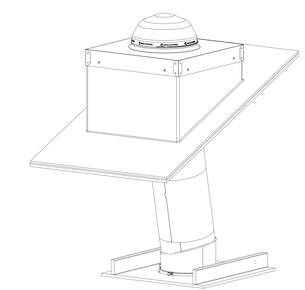

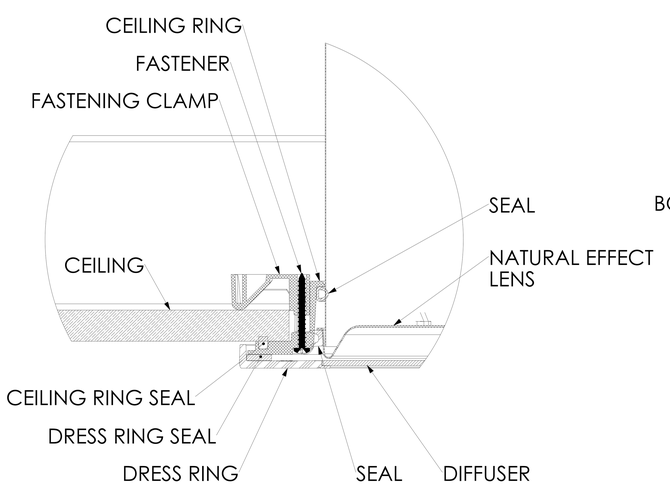

DETAIL C
SCALE 3 : 1

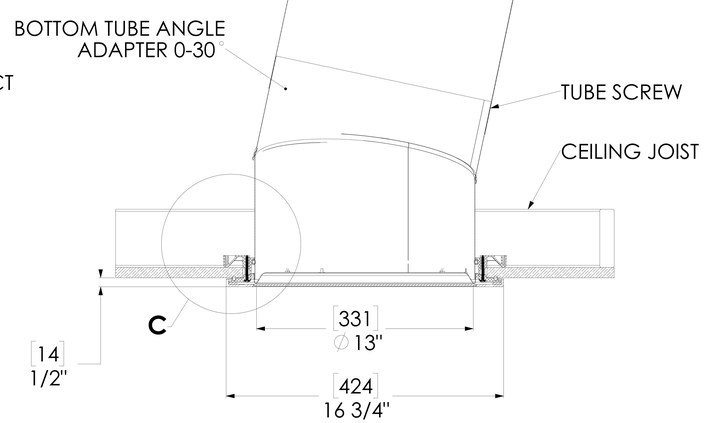

SECTION A-A
SCALE 1 : 1

NOTES:

1. STRUCTURAL ELEMENTS (PLYWOOD, RAFTERS, DRYWALL ETC.) BY OTHERS & SHOWN FOR REFERENCE ONLY.
2. ALL TUBE JOINTS & SEAMS TAPED WITH 2" FOIL TAPE (NOT SHOWN).
3. DIMENSIONS IN BRACKETS ARE METRIC UNLESS OTHERWISE SPECIFIED.
4. 6" MIN. CLEARANCE SHOULD BE MAINTAINED FROM ALL SOLATUBE COMPONENTS AND OTHER PLENUM COMPONENTS.

UNLESS OTHERWISE SPECIFIED: DIMENSION TOLERANCE FRACTIONS ± 1/4" INCH: .X ± .1, .XX ± .06 MILLIMETER: [.X] ± 2.5, [.XX] ± 1.5	SOLATUBE INTERNATIONAL, INC. COPYRIGHT 2018 WWW.SOLATUBE.COM	SOLATUBE 2210 OAK RIDGE WAY VISTA, CALIFORNIA 92081-8341 PH (760) 597-4400	
MATERIAL -- --	DRAWN BY: STEVENS	DATE: --	TITLE: 290 DS (14") CURB CAP PITCHED ROOF-HARD CEILING
FINISH --	CHECKED BY: --	DATE: --	SIZE: D
DO NOT SCALE DRAWING	APPROVED BY: --	DATE: --	DWG. NO. S290DS-DAI-FCp REV 1 SCALE: 1:2 SHEET 1 OF 1